Exam Date & Time: 24-Feb-2023 (02:30 PM - 05:30 PM)

MANIPAL ACADEMY OF HIGHER EDUCATION

FIRST SEMESTER B.TECH. EXAMINATIONS - FEBRUARY/MARCH 2023
SUBJECT: ELE 1071 / ELE-1071 - BASIC ELECTRICAL TECHNOLOGY (MAKEUP)

BASIC ELECTRICAL TECHNOLOGY [ELE 1071]

Marks: 50 **Duration: 180 mins.**

A

Answer all the questions.

1A) In the given network, $\mathbf{R_1 = 10\ \Omega}$, $\mathbf{R_2 = 30\ \Omega}$, $\mathbf{R_3 = 50\ \Omega}$, $\mathbf{R_4 = 70\ \Omega}$, and $\mathbf{R_5 = 100\ \Omega}$. The batteries have a negligible internal resistance; their voltages are $\mathbf{V_1 = 12\ V}$, $\mathbf{V_2 = 24\ V}$, **and** $\mathbf{V_3 = 36\ V}$. Using mesh analysis,

a) Calculate the current through (magnitude and direction) in all the resistors.

b) Determine $\mathbf{V_{AP}}$ and $\mathbf{V_{PN}}$

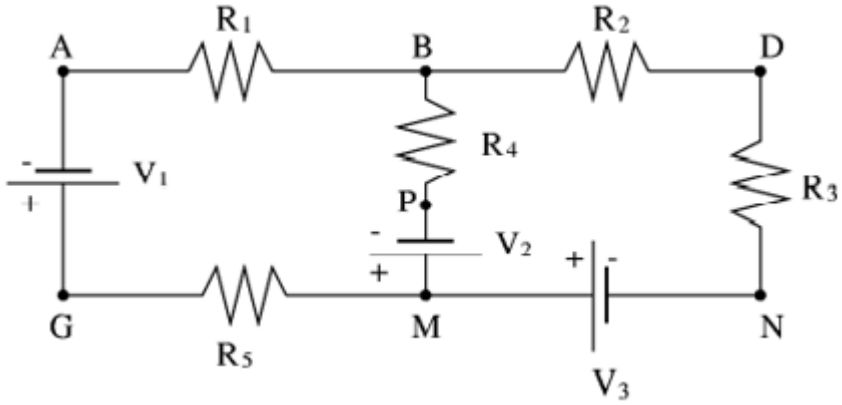

(3)

1B) Find the value of the $\mathbf{R_L}$ in the given network for maximum power transfer. Also calculate the maximum power.

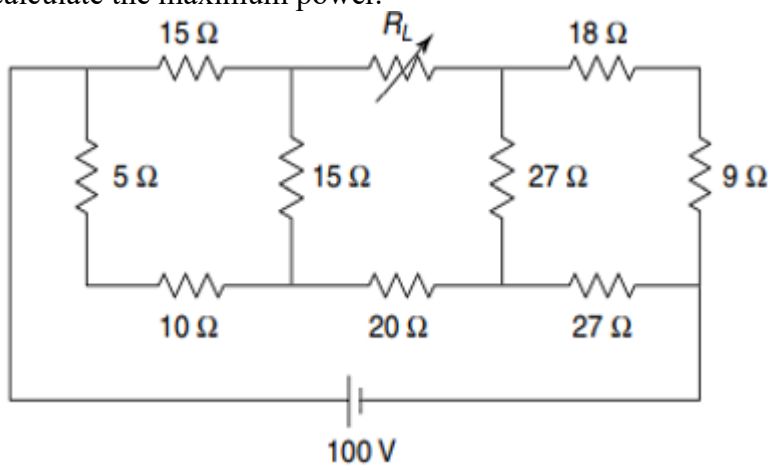

(4)

1C) Find the current through the **4 Ω** resistor in the given network using **superposition** principle. (3)

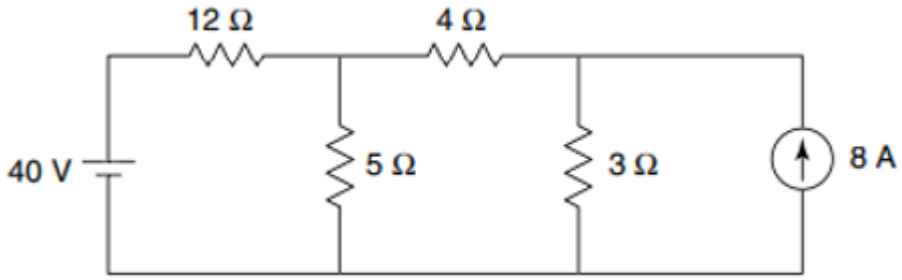

2A) The switch was in open position for a long time. It is operated as shown. Compute and plot the capacitor voltage for **t > 0**. Also find the time at which the capacitor voltage is **50 V**.

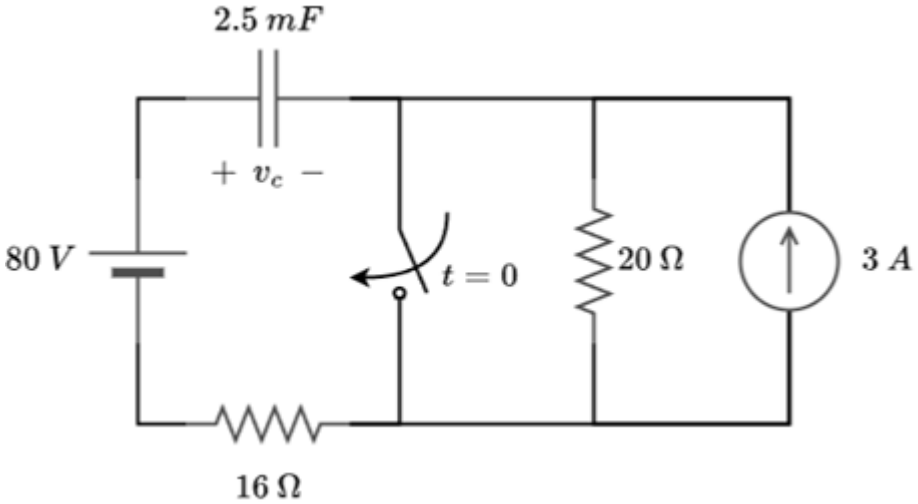

(4)

2B) A ring of **30 cm** mean diameter is made using a cylindrical iron rod of diameter **2.5 cm**. A saw-cut of **1 mm** wide is made through the ring to create an airgap. A coil with **500** turns of wire is wound on the ring. Calculate the current required in the exciting coil to produce a flux of **4 mWb** in the ring. Assume the relative permeability of iron at this flux density as **800**. Neglect any leakage or fringing of the magnetic field.

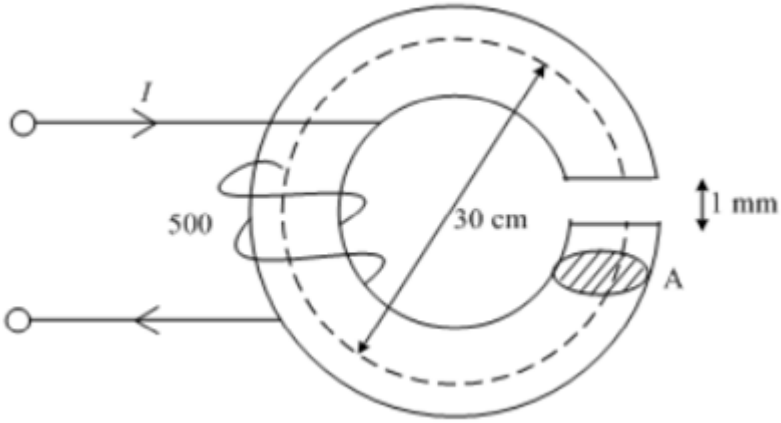

(3)

2C) The following circuit is supplied from a **50 Hz** source with current entering from **RHS**. Draw the dotted equivalent circuit and determine the equivalent inductance if the coefficient of coupling between coils **1 & 2** and coils **2 & 3** is **0.7** each and that between (3)

coils **1 & 3** is **0.4**.

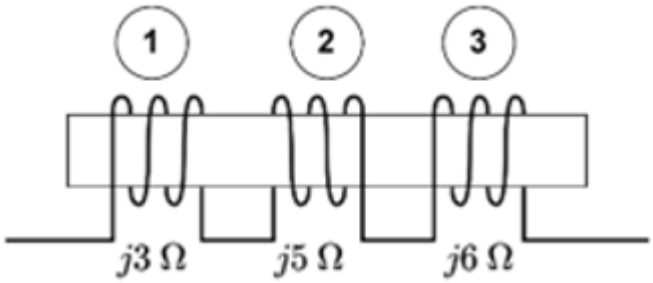

3A) A load of **2 kW** operates at **0.8** lagging power factor when connected to a **240 V**, **1-phase**, **50 Hz** source. Find
i) Current in the load and power factor angle. (3)
ii) Impedance, resistance, and reactance of the load.

3B) For the circuit shown below, calculate the:
i) Total admittance, total conductance, and total susceptance.
ii) Total current and power factor.
iii) The value of the pure capacitance to be connected in parallel with the above combination to make the total power factor unity.

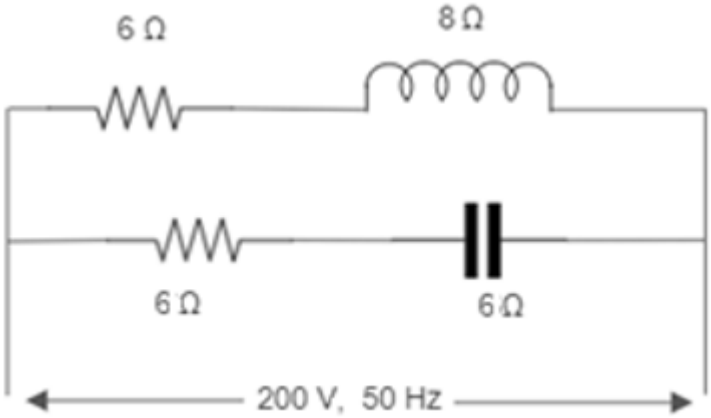

(4)

3C) A series R-L-C circuit has the following parameter values **R = 10 Ω**, **L = 0.01 H**, **C= 100 μF**. Compute the resonant frequency, bandwidth, and lower and upper half power frequencies. (3)

4A) A **1-phase** motor takes **15 A** at a power factor of **0.6** lagging from a **230 V**, **50 Hz** supply. Determine (i) the capacitance of the capacitor, and the current taken by it, connected in parallel with the motor to correct the power factor to **0.8** lagging, and (ii) the value of the supply current after power factor correction. (4)

4B) Three loads: $\mathbf{Z_{RY} = (50 + j\,40)\ \Omega}$, $\mathbf{Z_{YB} = 100\ \Omega}$ and $\mathbf{Z_{BR} = (80 - j\,60)\ \Omega}$ are connected in **delta** across a balanced **3-Phase**, **415 V**, **50 Hz**, **RYB** supply system. Assuming $\mathbf{V_{RY}}$ as the reference phasor, determine: (6)
i) Phase currents and circulating current in the delta.
ii) Line currents and phasor sum of line currents.

5A) The **3-phase star** connected balanced load has an impedance of **Z = (8 + j6) Ω** per phase. If the load is connected to **3-phase**, **208 V** supply and two-wattmeter method is used to measure the power, find the readings of the wattmeters and load power factor using wattmeter readings. Also find the total active, reactive, and apparent power. (4)

5B) Discuss the function and utility of an electrical substation. List out the major substation components. (3)

5C) Explain the operation of a transformer. Obtain the expressions for primary and secondary induced EMF in a transformer. (3)

-----End-----